SSL 星源锁业
starsource locks

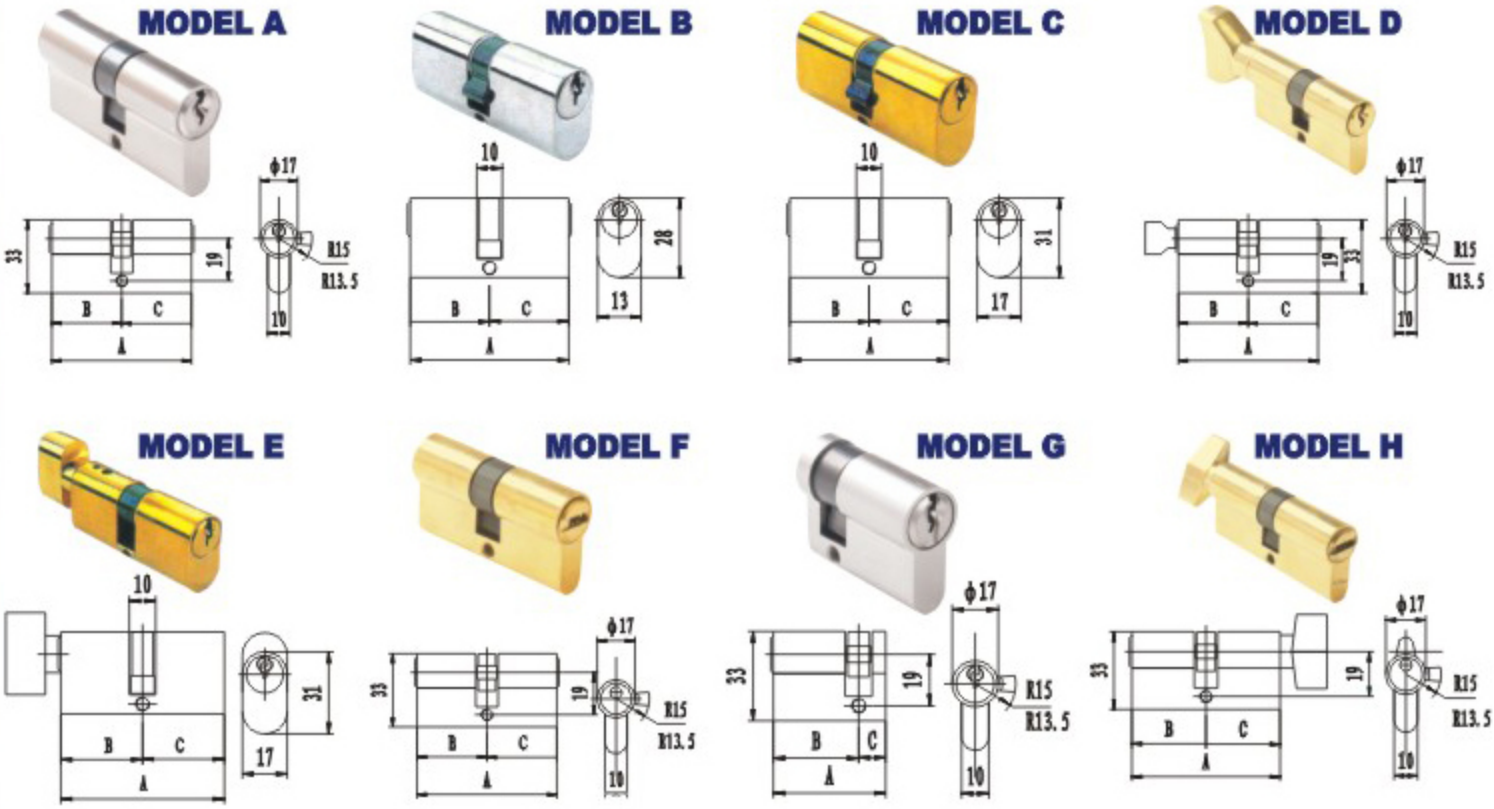

■ 锁芯规格 CYLINDER SPECIFICATIONS
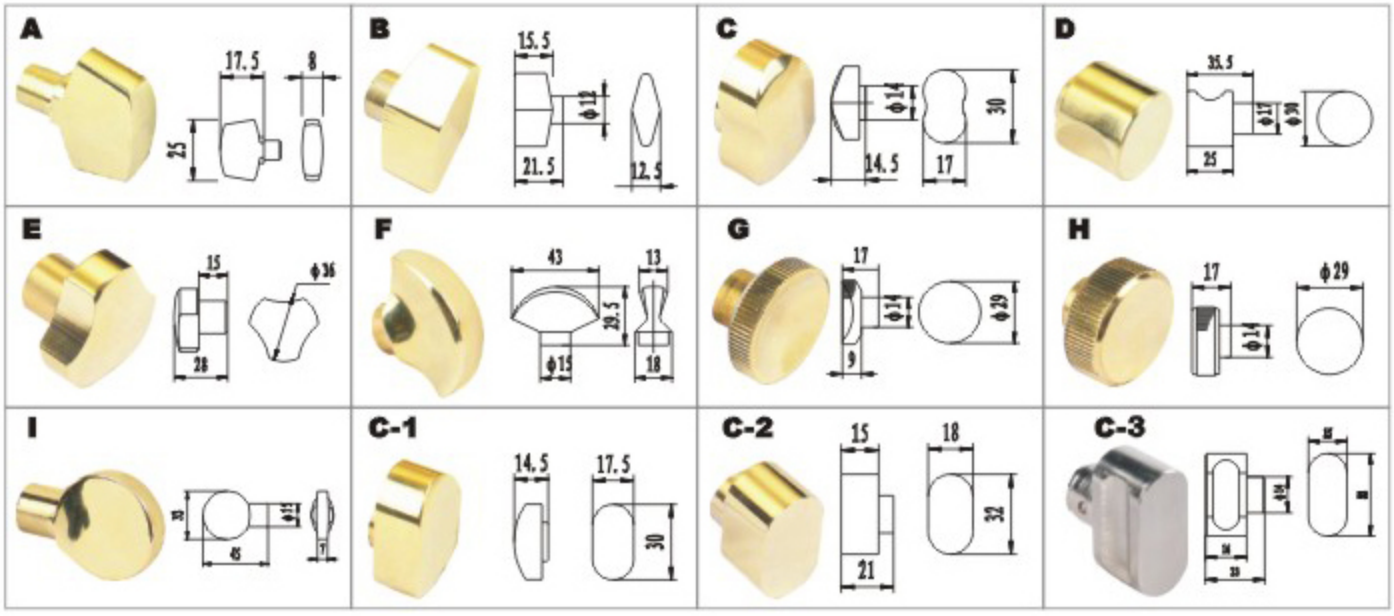
A	40	45	50	54	60	62	62	63	68	70	70	72	75	80	80	85	90	90	100	100	110	120	140
B	30	35	40	27	30	31	29.5	32.5	31	35	29.5	35	37.5	38	40	40	40	45	45	50	55	50	70
C	10	10	10	27	30	31	32.5	32.5	37	35	40.5	37	37.5	42	40	45	50	45	55	50	55	70	70